7. MT Gear Shift Lever

A: REMOVAL

1. 5MT

1) Set the vehicle on a lift.
2) Disconnect the ground cable from the battery.
3) Remove the gear shift knob.
4) Remove the console box. <Ref. to EI-46, REMOVAL, Console Box.>
5) Remove the clamp.

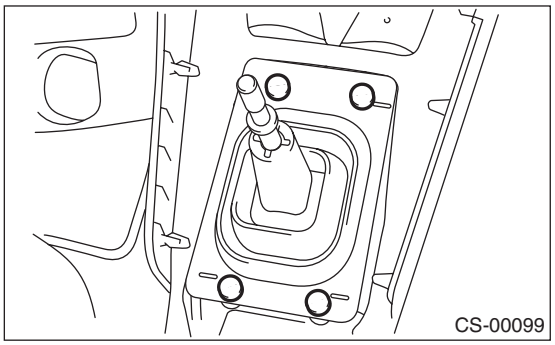

6) Remove the bushing and insulator assembly.

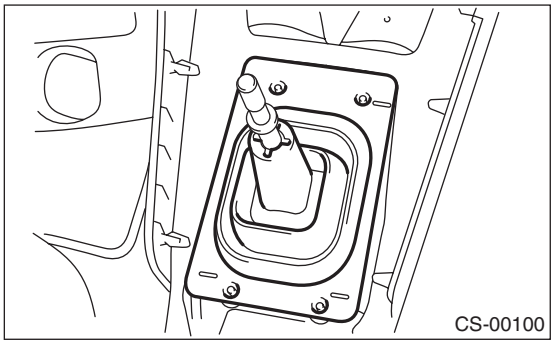

7) Remove the plate assembly from the vehicle body.

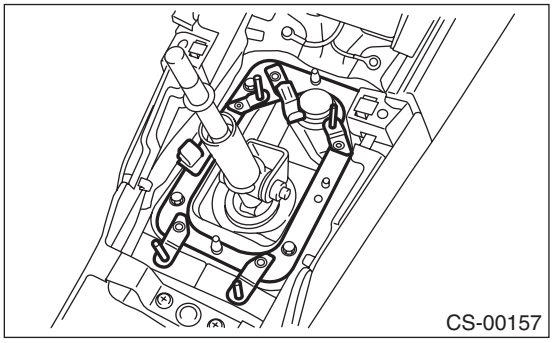

8) Lift up the vehicle.
9) Remove the rear exhaust pipe and muffler.
- SOHC model

<Ref. to EX(H4SO)-8, REMOVAL, Rear Exhaust Pipe.> <Ref. to EX(H4SO)-9, REMOVAL, Muffler.>
- DOHC Turbo Model

<Ref. to EX(H4DOTC)-15, REMOVAL, Rear Exhaust Pipe.> <Ref. to EX(H4DOTC)-17, REMOVAL, Muffler.>

10) Remove the stay from transmission bracket.

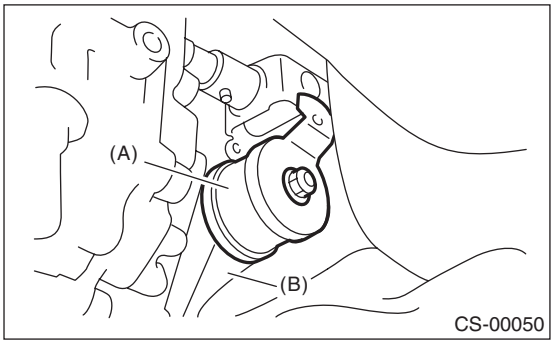

(A) Stay
(B) Transmission bracket

11) Remove the rod from joint.

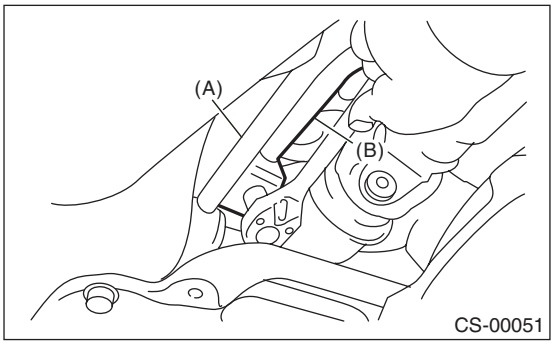

(A) Stay
(B) Rod

12) Remove the cushion rubber from the vehicle body.

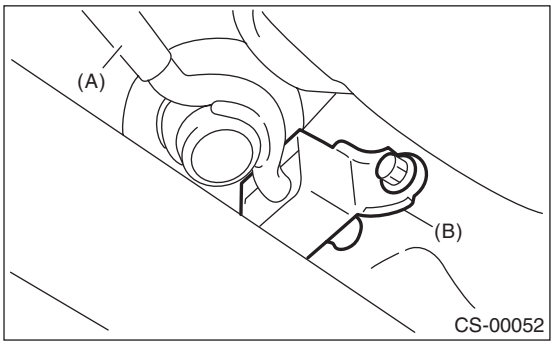

(A) Stay
(B) Cushion rubber

13) Extract the spring pin and remove the joint.

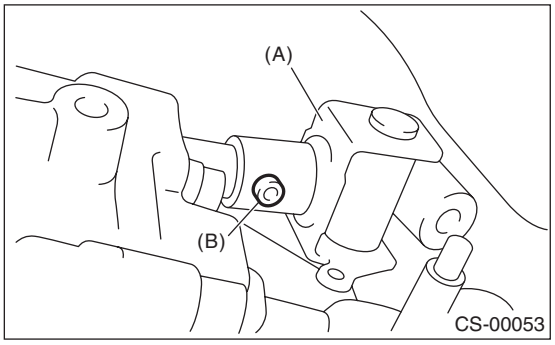

(A) Joint
(B) Spring pin

14) Lower the vehicle.
15) Remove the gear shift lever.

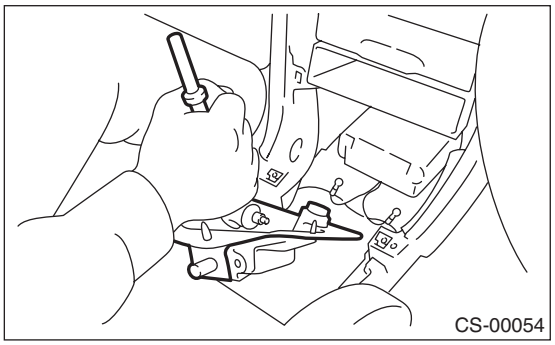

2. 6MT

1) Set the vehicle on a lift.
2) Disconnect the ground cable from the battery.
3) Remove the gear shift knob.
4) Remove the console box front. <Ref. to EI-46, REMOVAL, Console Box.>
5) Remove the boot plate from the vehicle body.

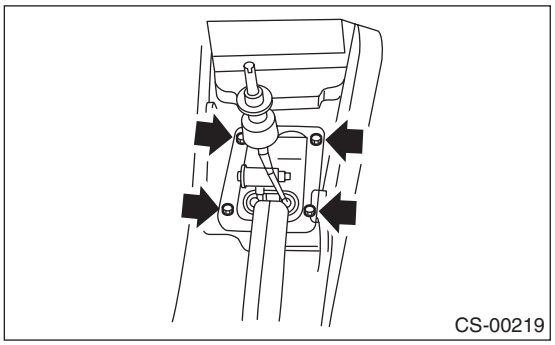

6) Lift up the vehicle.
7) Remove the under cover.
8) Remove the rear exhaust pipe and muffler. <Ref. to EX(H4DOTC)-15, REMOVAL, Rear Exhaust Pipe.> <Ref. to EX(H4DOTC)-17, REMOVAL, Muffler.>
9) Remove the crossmember. <Ref. to 6MT-32, REMOVAL, Transmission Mounting System.>
10) Remove the snap pin and washer, and remove the reverse check cable from the reverse check lever.

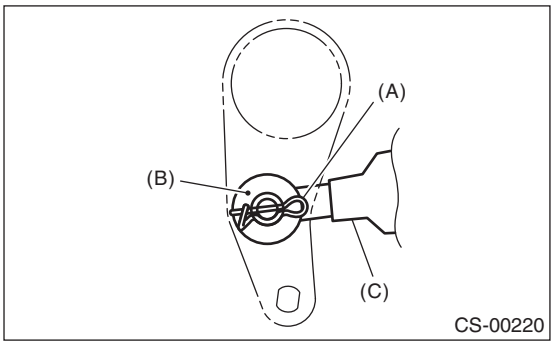

(A) Snap pin
(B) Washer
(C) Reverse check cable

11) Move the transmission to the right side of the vehicle, and remove the joint COMPL, stay bolts and reverse check cable.

NOTE:
If the transmission is not moved aside, the joint COMPL and stay bolts may contact the body and cause damage.

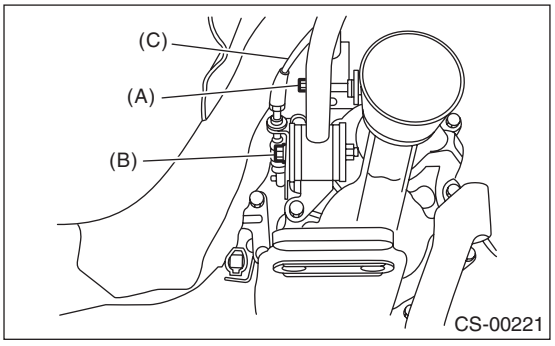

(A) Joint COMPL bolt
(B) Stay bolt
(C) Reverse check cable

12) Remove the cushion rubber from the vehicle body.

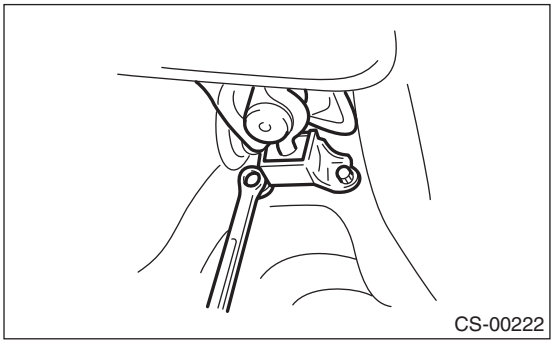

13) Lower the vehicle.
14) Remove the gear shift lever.

B: INSTALLATION

1. 5MT

1) Install the joint to the transmission and secure with a spring pin.
2) Insert the gear shift lever from the room side.

NOTE:
After inserting the rod and stay, temporarily position them on the transmission mount.

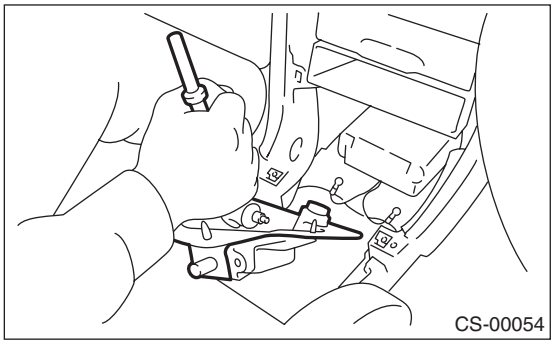

3) Lift up the vehicle.
4) Install the joint to the shifter arm.
5) Insert the spring pin.

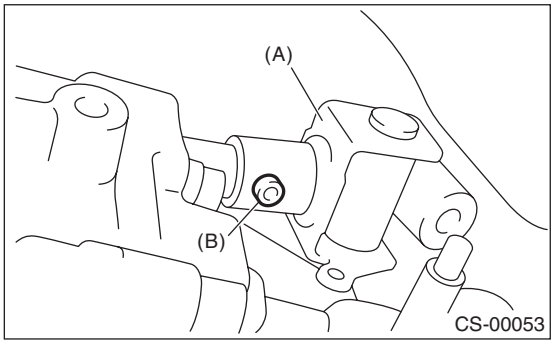

(A) Joint
(B) Spring pin

6) Mount the cushion rubber on the vehicle body.

Tightening torque:
18 N·m (1.8 kgf-m, 13.0 ft-lb)

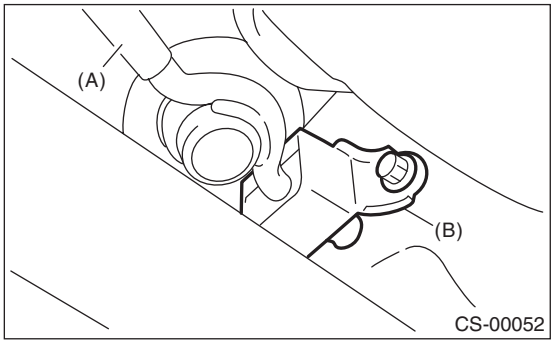

(A) Stay
(B) Cushion rubber

7) Connect the rod to the joint.

Tightening torque:
12 N·m (1.2 kgf-m, 8.9 ft-lb)

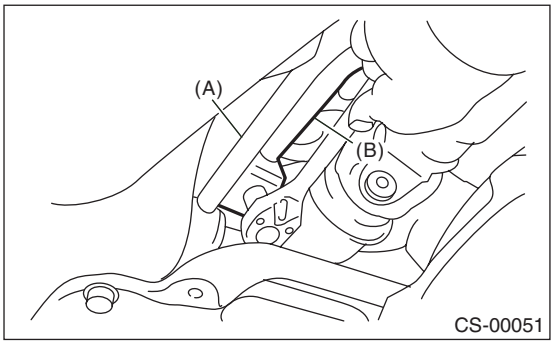

(A) Stay
(B) Rod

8) Connect the stay to the transmission bracket.

Tightening torque:
18 N·m (1.8 kgf-m, 13.0 ft-lb)

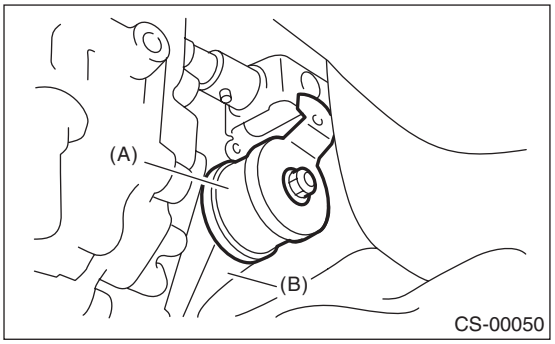

(A) Stay
(B) Transmission bracket

9) Install the rear exhaust pipe and muffler.
- SOHC model

<Ref. to EX(H4SO)-8, INSTALLATION, Rear Exhaust Pipe.> <Ref. to EX(H4SO)-9, INSTALLATION, Muffler.>
- DOHC Turbo model

<Ref. to EX(H4DOTC)-15, INSTALLATION, Rear Exhaust Pipe.> <Ref. to EX(H4DOTC)-17, INSTALLATION, Muffler.>
10) Lower the vehicle.

11) Install the plate assembly to the vehicle body.

Tightening torque:
7.5 N·m (0.76 kgf-m, 5.5 ft-lb)

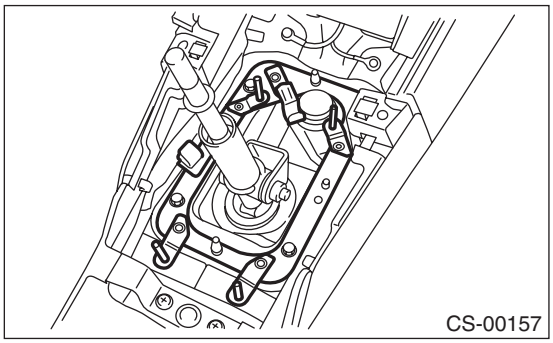

12) Install the boot and insulator assembly to the vehicle body in the proper direction.

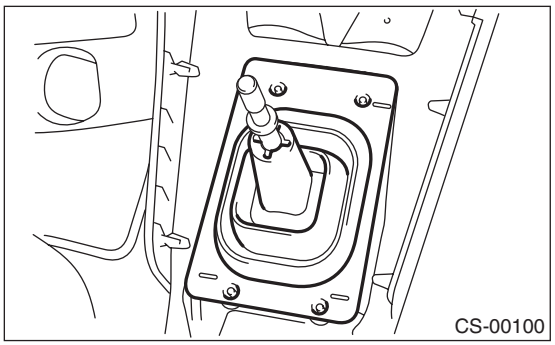

13) Install the clamp.
14) Install the console box. <Ref. to EI-46, INSTALLATION, Console Box.>

2. 6MT

1) Insert the gear shift lever from the room side.

NOTE:
After inserting the rod and stay, temporarily position them on the transmission mount.
2) Mount the cushion rubber on the vehicle body.

Tightening torque:
18 N·m (1.8 kgf-m, 13.0 ft-lb)

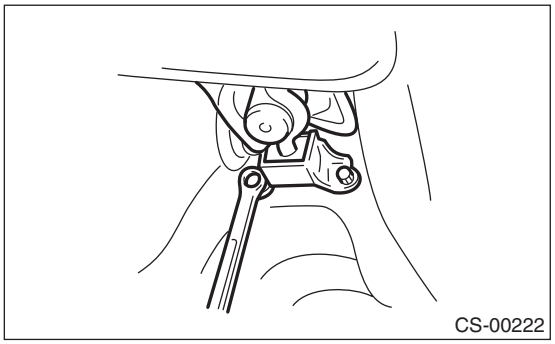

3) Move the transmission to the right side of the vehicle, then attach the joint COMPL and stay.

Tightening torque:
T1:11.8 N·m (1.2 kgf-m, 8.7 ft-lb)
T2:32 N·m (3.3 kgf-m, 23.6 ft-lb)

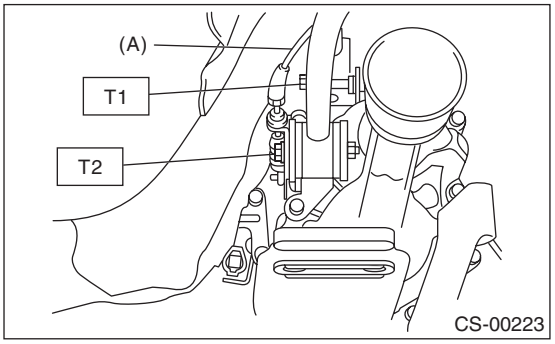

(A) Reverse check cable

4) Install the crossmember. <Ref. to 6MT-32, INSTALLATION, Transmission Mounting System.>
5) Attach the reverse check cable end, washer and snap pin to the reverse check lever.

NOTE:
- Make sure to attach the snap pin in proper direction.
- Before installation, perform adjustment of the reverse check cable. <Ref. to CS-48, ADJUSTMENT, Reverse Check Cable.>

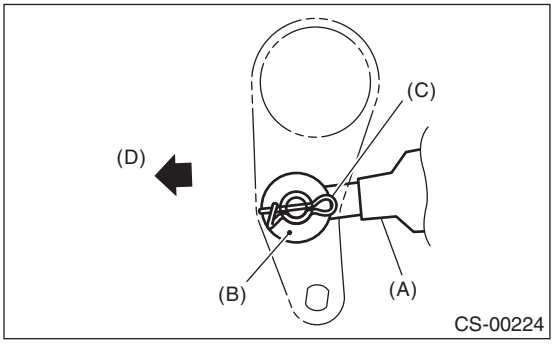

(A) Reverse check cable
(B) Washer
(C) Snap pin
(D) Front side

6) Install the rear exhaust pipe and muffler. <Ref. to EX(H4DOTC)-15, INSTALLATION, Rear Exhaust Pipe.>, <Ref. to EX(H4DOTC)-17, INSTALLATION, Muffler.>
7) Install the under cover.

8) Install the boot plate.

NOTE:
Install the inner boot taking care not to twist it.

Tightening torque:
7.5 N·m (0.76 kgf-m, 5.5 ft-lb)

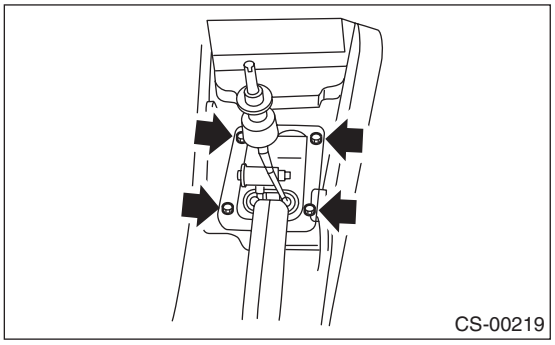

9) Install the console box. <Ref. to EI-46, INSTALLATION, Console Box.>
10) Make sure the gears can be shifted accurately into each gear.

C: DISASSEMBLY

1. 5MT

1) Remove the lock wires.

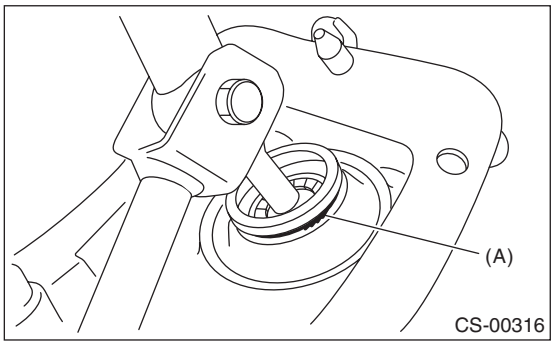

(A) Lock wire

2) Remove the rod from lever.

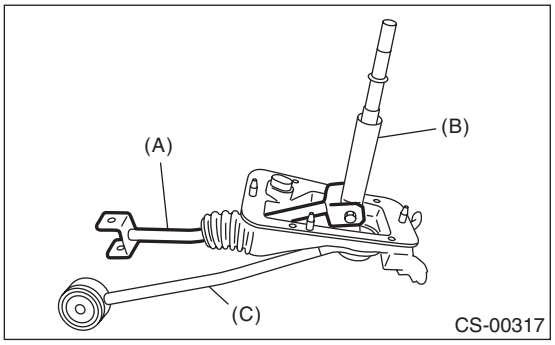

(A) Rod
(B) Lever
(C) Stay

3) Separate the rod and inner boot.

4) Remove the snap ring from the stay.

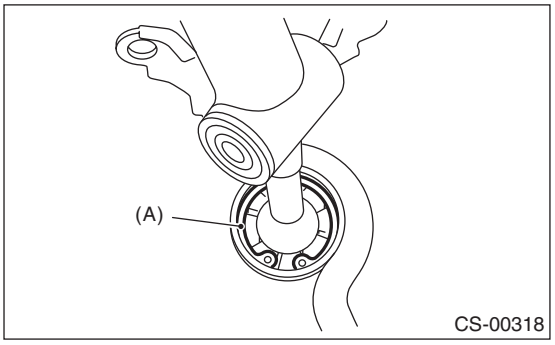

(A) Snap ring

5) Separate the gear shift lever and the stay.

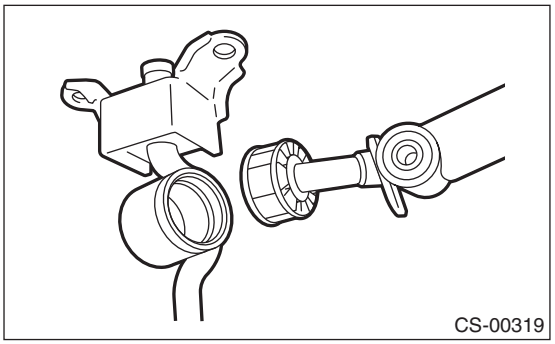

6) Remove the boot, bushing and snap ring from gear shift lever.

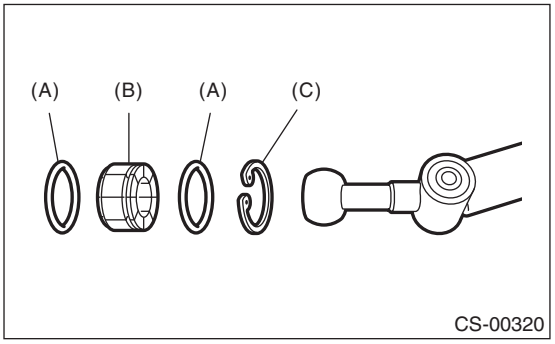

(A) O-ring
(B) Bushing
(C) Snap ring

7) Remove the spring pin, and then remove the bushing and snap ring.

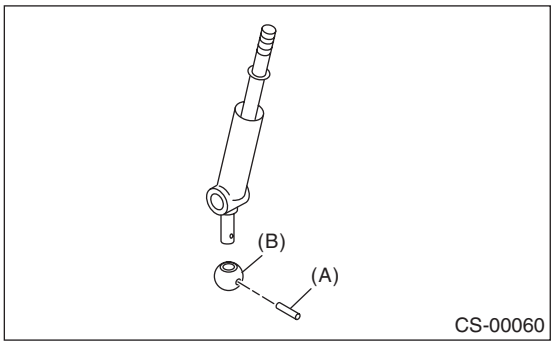

(A) Spring pin
(B) Bushing

8) Remove the boss from the joint.

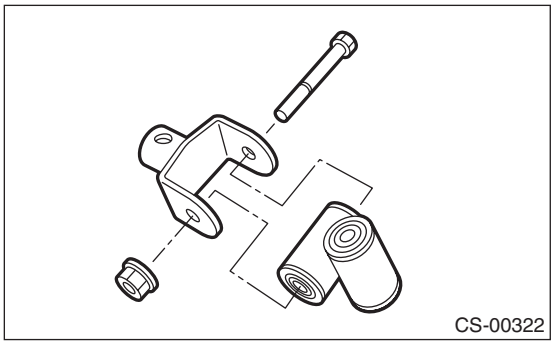

2. 6MT

1) Remove the spring pin from the slider.

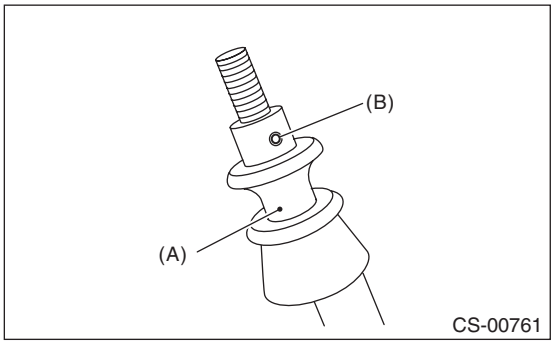

(A) Slider
(B) Spring pin

2) Remove the slider and spring.

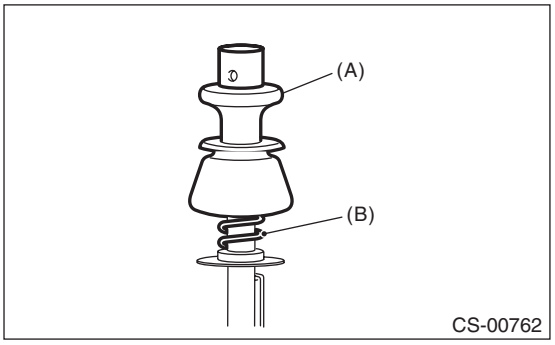

(A) Slider
(B) Spring

3) Cut the band clip.

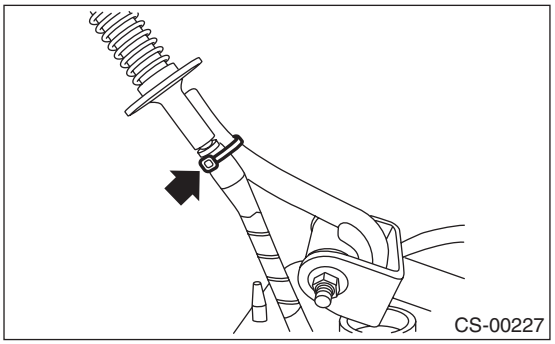

4) Remove the reverse check cable from the cable plate.

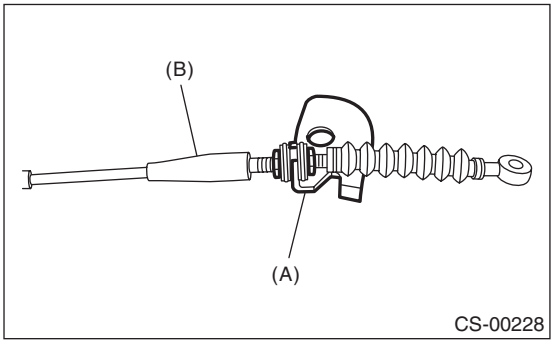

(A) Cable plate
(B) Reverse check cable

5) Remove the reverse check cable from the gear shift assembly.

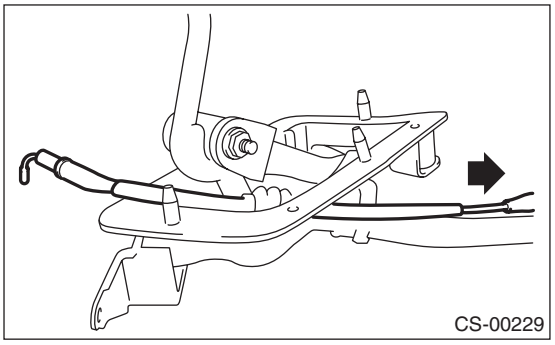

6) Disassemble the lock wire.

NOTE:
Do not reuse the lock wire.

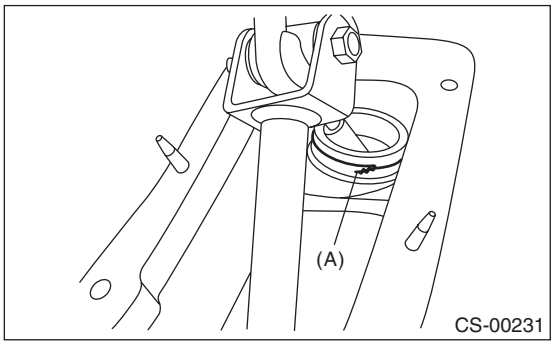

(A) Lock wire

7) Remove the boss from the rod.

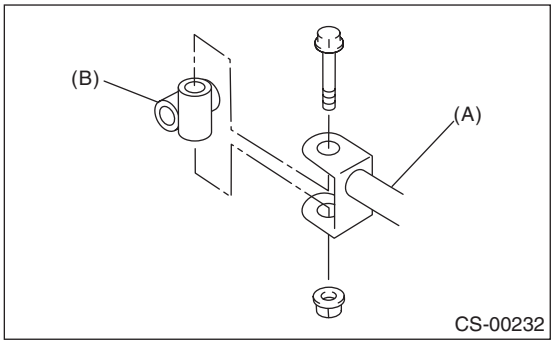

(A) Rod
(B) Boss

8) Remove the rod from lever.

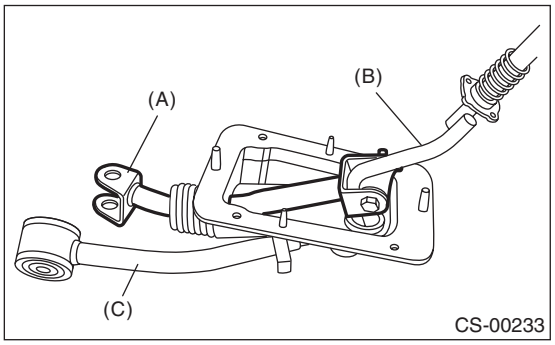

(A) Rod
(B) Lever
(C) Stay

9) Separate the rod and inner boot.

10) Remove the snap ring from the stay.

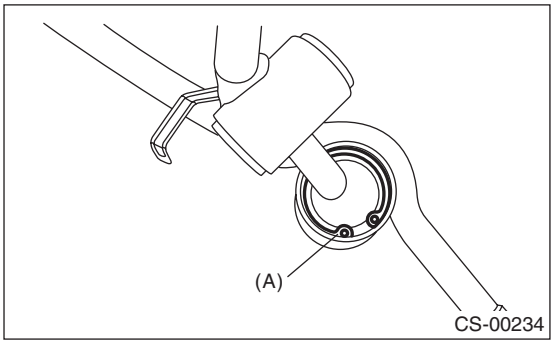

(A) Snap ring

11) Separate the gear shift lever and the stay.

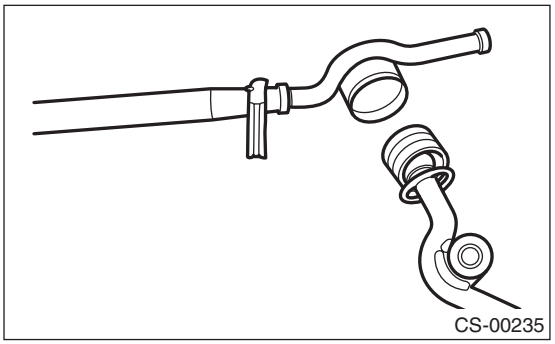

12) Remove the boot and bushing from the gear shift lever.

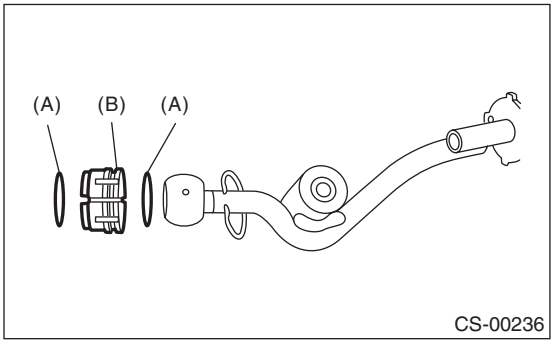

(A) O-ring
(B) Bushing

13) Remove the spring pin, and then remove the bushing and snap ring.

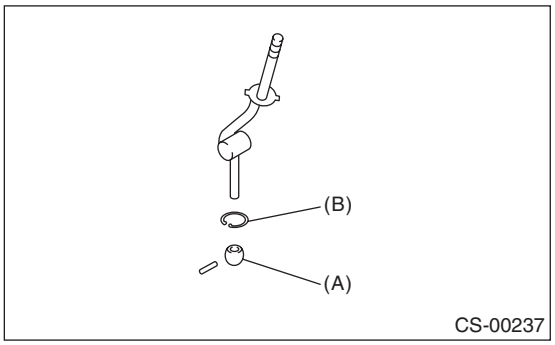

(A) Bushing
(B) Snap ring

14) Remove the bushing and spacer from the boss.

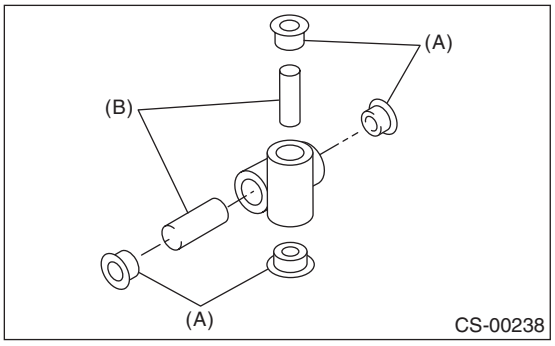

(A) Bushing
(B) Spacer

15) Remove the bushing and cushion rubber from the stay.

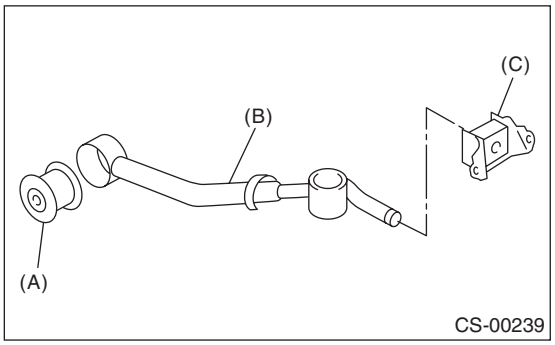

(A) Bushing
(B) Stay
(C) Cushion rubber

D: ASSEMBLY

1. 5MT

NOTE:
- Clean all the parts before assembly.
- Apply grease [KOPR-KOTE (Part No. 003603001) or equivalent] to each part.

1) Mount the bushing and cushion rubber to the stay.

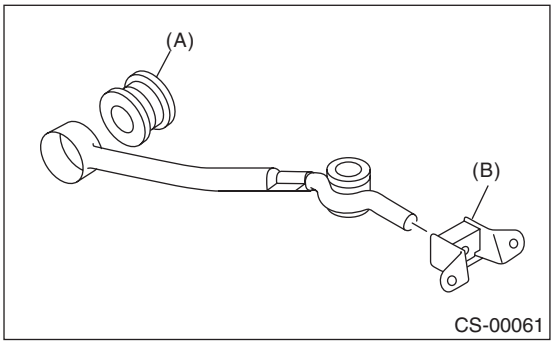

(A) Bushing
(B) Cushion rubber

2) Install the bushing and spacer to boss.

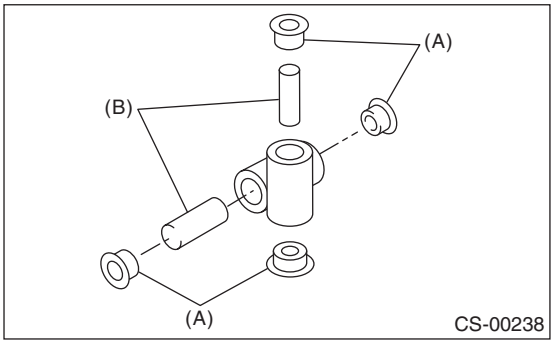

(A) Bushing
(B) Spacer

3) Using new self-locking nuts, install the boss to the joint.

Tightening torque:
12 N·m (1.2 kgf-m, 8.9 ft-lb)

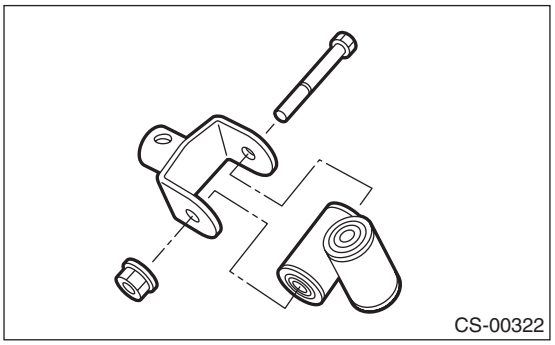

4) Install the snap ring to gear shift lever and install the bushing.

NOTE:
Apply grease to the bushing.

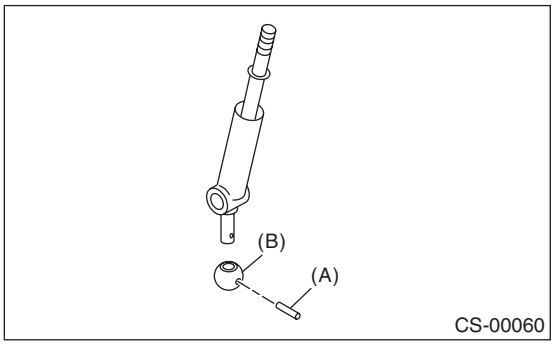

(A) Spring pin
(B) Bushing

5) Apply grease to the bushing and O-ring, and then install to gear shift lever.

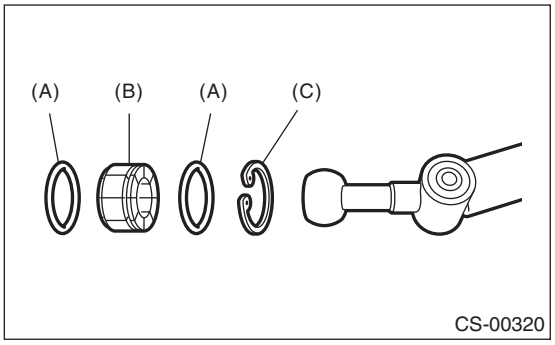

(A) O-ring
(B) Bushing
(C) Snap ring

6) Apply sufficient grease into boss, and then install the gear shift lever to the stay.

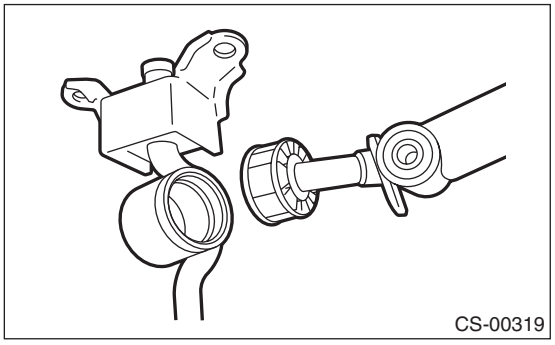

7) Install the washer and snap ring.

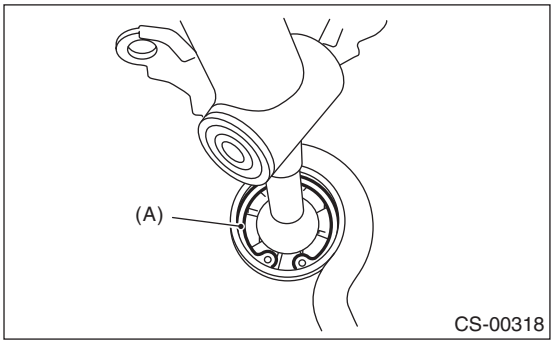

(A) Snap ring

8) Insert the gear shift lever and rod into boot hole.
9) Install the rod.

Tightening torque:
12 N·m (1.2 kgf-m, 8.9 ft-lb)

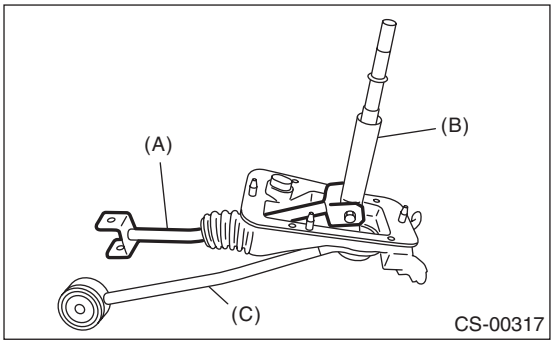

(A) Rod
(B) Lever
(C) Stay

10) Install a new lock wire.

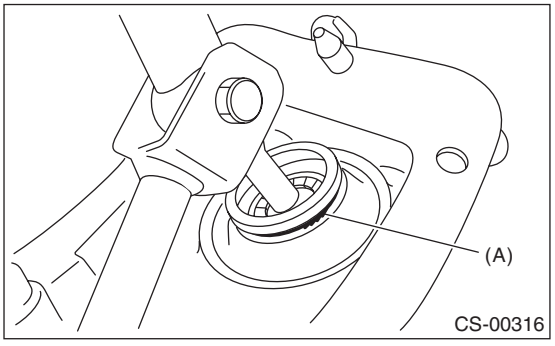

(A) Lock wire

NOTE:
- Install the lock wire to the stay groove.
- Bend the extra wire to the same direction of lock wire winding.

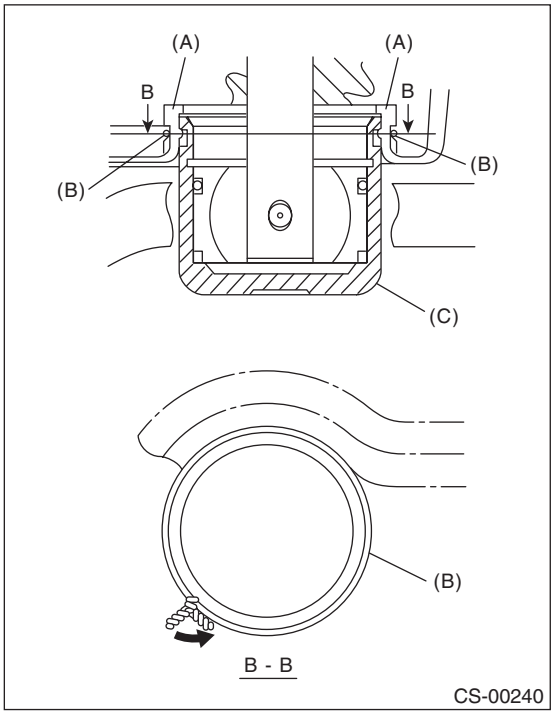

(A) Inner boot
(B) Lock wire
(C) Stay

11) Check the swing torque of rod linked with the gear shift lever.
12) Check that the part moves smoothly, with no excessive play.

2. 6MT

NOTE:
- Clean all the parts before assembly.
- Apply NIGTIGHT LYW NO. 2 grease or the equivalent to each part.

1) Mount the bushing and cushion rubber to the stay.

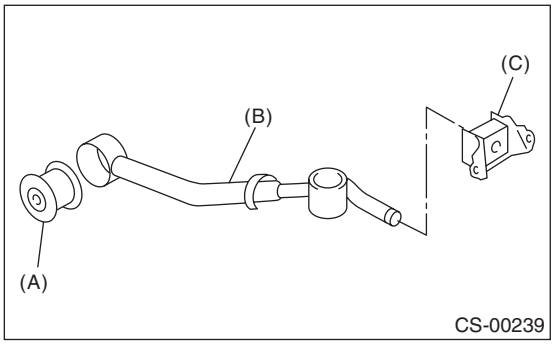

(A) Bushing
(B) Stay
(C) Cushion rubber

2) Install the bushing and spacer to boss.

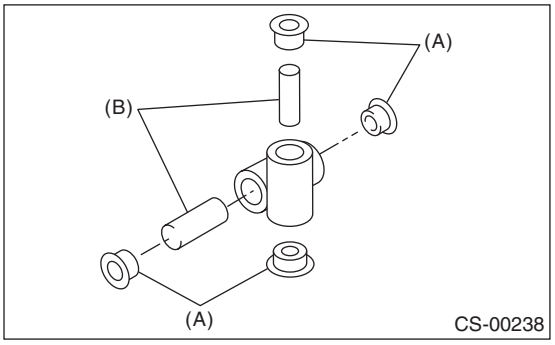

(A) Bushing
(B) Spacer

3) Install the snap ring to gear shift lever and install the bushing.

NOTE:
Apply grease to the bushing.

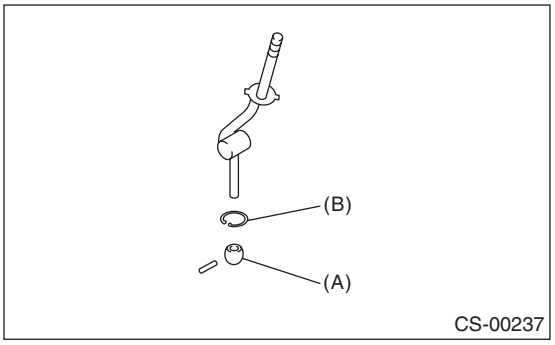

(A) Bushing
(B) Snap ring

4) Apply grease to the bushing and O-ring, and then install to gear shift lever.

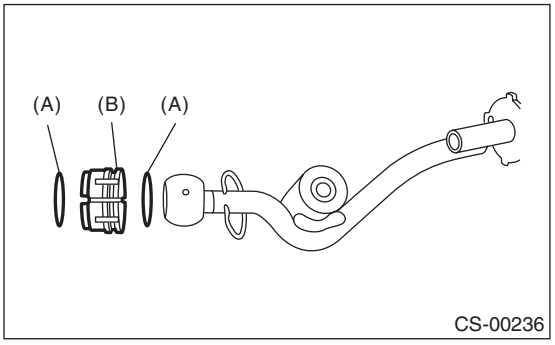

(A) O-ring
(B) Bushing

5) Apply sufficient grease to the boss, and then install the gear shift lever to the stay.

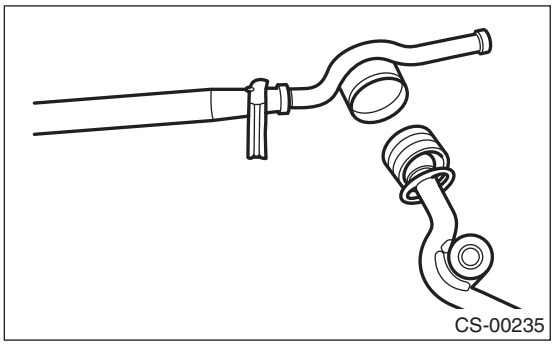

6) Install the washer and snap ring.

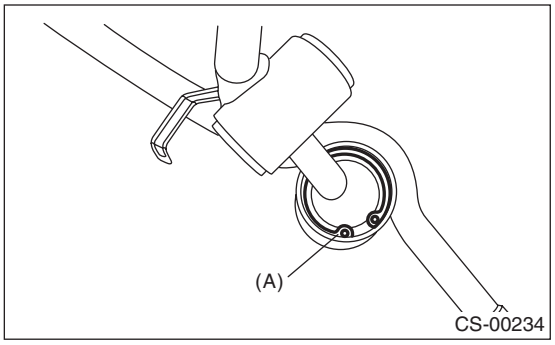

(A) Snap ring

7) Insert the gear shift lever and rod into boot hole.
8) Install the rod.

Tightening torque:
11.8 N·m (1.2 kgf-m, 8.7 ft-lb)

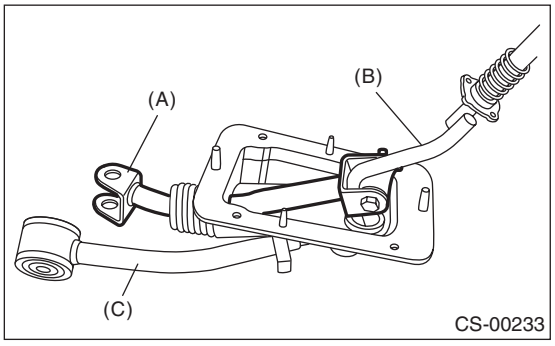

(A) Rod
(B) Lever
(C) Stay

9) Attach the boss to the rod.

Tightening torque:
11.8 N·m (1.2 kgf-m, 8.7 ft-lb)

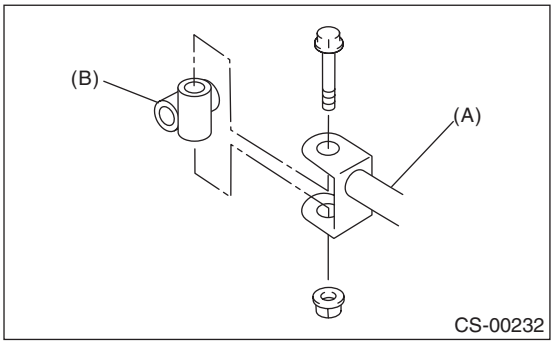

(A) Rod
(B) Boss

10) Install a new lock wire.

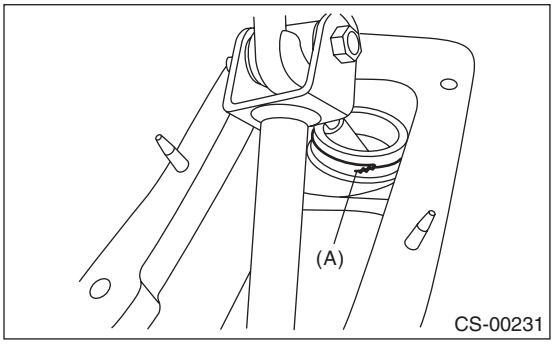

(A) Lock wire

NOTE:
- Install the lock wire to the stay groove.
- Bend the extra wire to the same direction of lock wire winding.

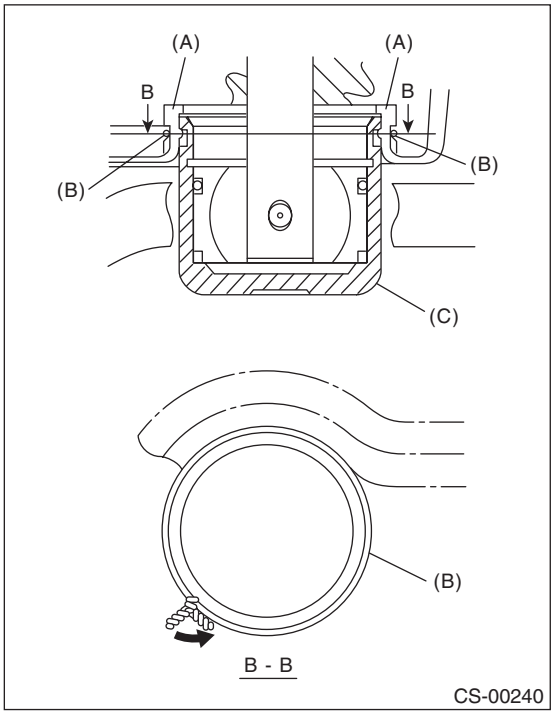

(A) Inner boot
(B) Lock wire
(C) Stay

11) Insert the reverse check cable into the boot hole.
12) Insert the reverse check cable into the gear shift assembly, and fix in place with a band clip.

NOTE:
- Cut the excess band clip.
- Make sure that the reverse check cable is inserted into the gearshift lever with no gaps.

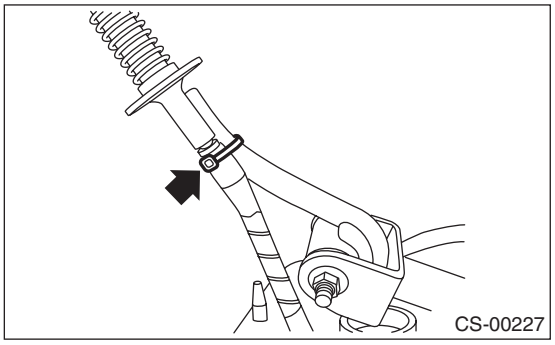

13) Attach the seat cushion and spring.

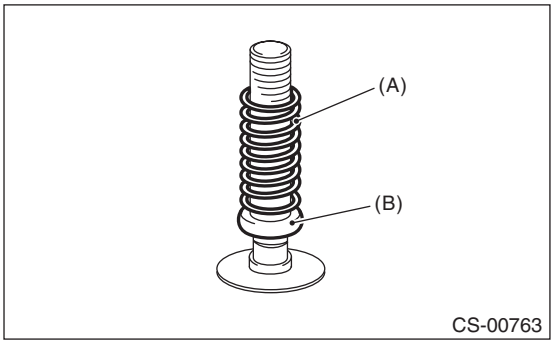

(A) Spring
(B) Seat cushion

14) Use a spring pin to hold the slider and end of the reverse check cable in place.

NOTE:
Apply grease to the moving part of slider.

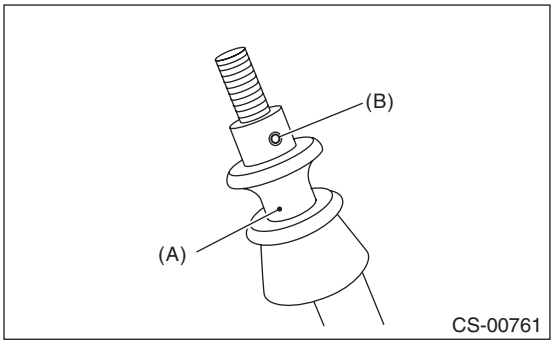

(A) Slider
(B) Spring pin

15) While pulling the cable (the slider is lowered), adjust the length between the cable plate end and the reverse check cable to 84 mm (3.31 in), and tighten the locknut.

Tightening torque:
6 N·m (0.6 kgf-m, 4.4 ft-lb)

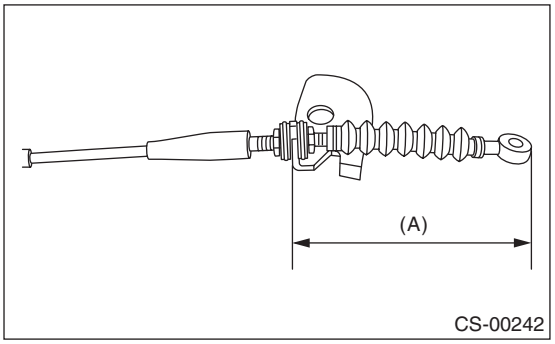

(A) 84 mm (3.31 in)

16) Fix the reverse check cable to the stay clip.

NOTE:
Install the reverse check cable on top of the stay.

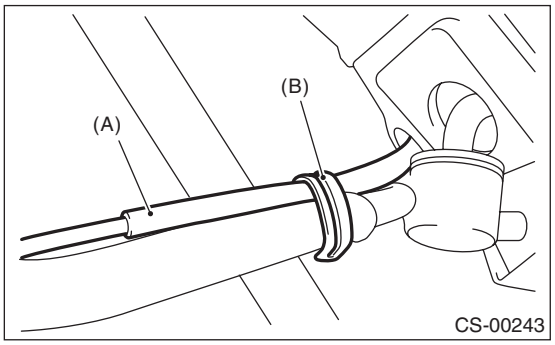

(A) Reverse check cable
(B) Clip

E: INSPECTION

1) Check the removed parts (bushing, cushion rubber, spacer, boot, stay and rod, etc.) for deformation, damage and wear. If necessary, correct or replace faulty parts.

- 5MT

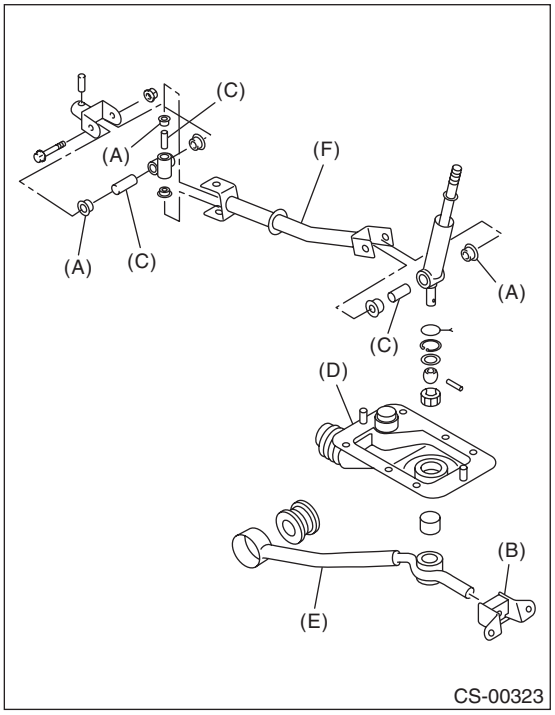

(A) Bushing
(B) Cushion rubber
(C) Spacer
(D) Boot
(E) Stay
(F) Rod

- 6MT

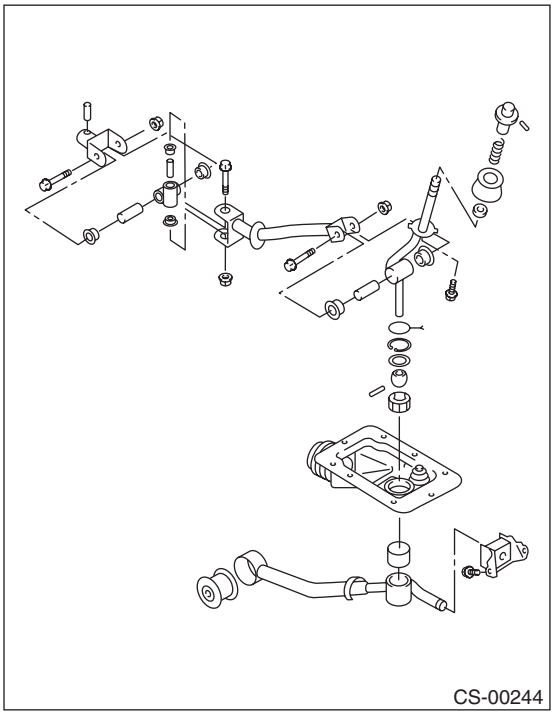

2) Check the swing torque of rod linked with the gear shift lever.
If the torque exceeds the specifications, replace the bushing or retighten nuts.

Swing torque:
3.7 N (0.38 kgf, 0.84 lbf) or less

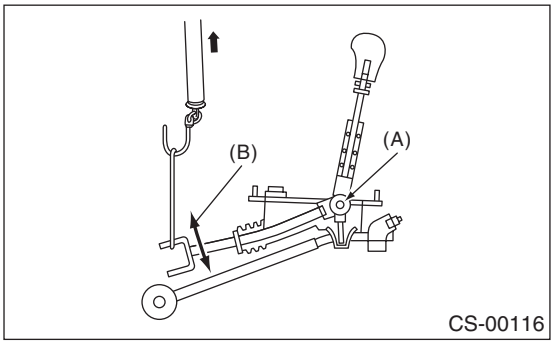

(A) Pivot
(B) Swing torque